Markwik 21+ Comfort SQ panel mounted mixer with detachable spout – non-thermostatic (PBV)

ILLUSTRATED

A7909 Markwik 21+ Comfort SQ panel mounted mixer with detachable spout – non thermostatic (PBV)

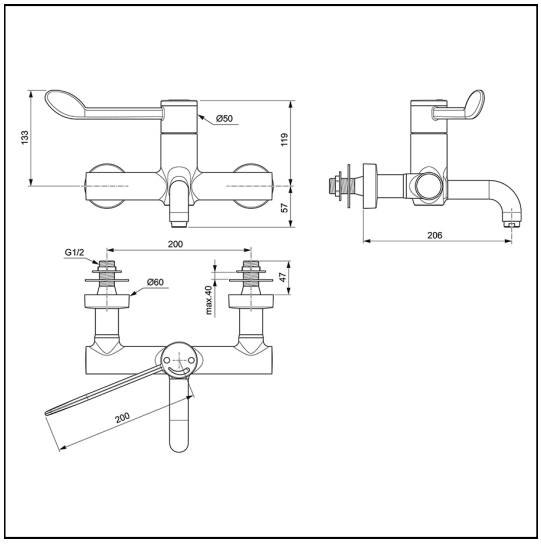

OPTIONS

A861794	Markwik 21+ comfort (M21 conversion pack)
S2154	Contour 21 back outlet washbasin, 50cm, no tapholes, no overflow, no chainstay hole
S2155	Contour 21 back outlet washbasin, 60cm, no tapholes, no overflow, no chainstay hole
S0430	Contour 21+ 50cm back outlet washbasin, no tapholes, anti-splash and anti-microbial glaze
S0444	Contour 21+ 60cm back outlet washbasin, no tapholes, anti-splash and anti-microbial glaze
S2144	Contour 21 back outlet washbasin, 50cm with 150mm upstand splashback, no tapholes, no overflow, no chainstay hole
A7910	Markwik 21+ Comfort SQ panel mounted mixer – non-thermostatic (PBV) BODY ONLY

ILLUSTRATED PRODUCT DETAILS

Weights

A7909 3.67 KG

Materials

A7909 Chrome Plated Brass

Finishes

A7909 Chrome (AA)

Flow rates

A7909 7 Litres per minute @ 3 bar pressure

Standards

EN 200, HTM 04-01

Special Notes

If using the S214401 basin then the shorter 100mm spout (A6252(AA) 100mm short projection spout) must be specified.

ACCREDITATIONS

FEATURES

Ideal Standard (UK) Ltd. makes every effort to ensure that the information provided on its website is accurate. However, we cannot guarantee this, and accept no liability for any information or advice given via its website.